# 5-1. THE EXPLODED VIEW OF TOP COVER ASSEMBLY

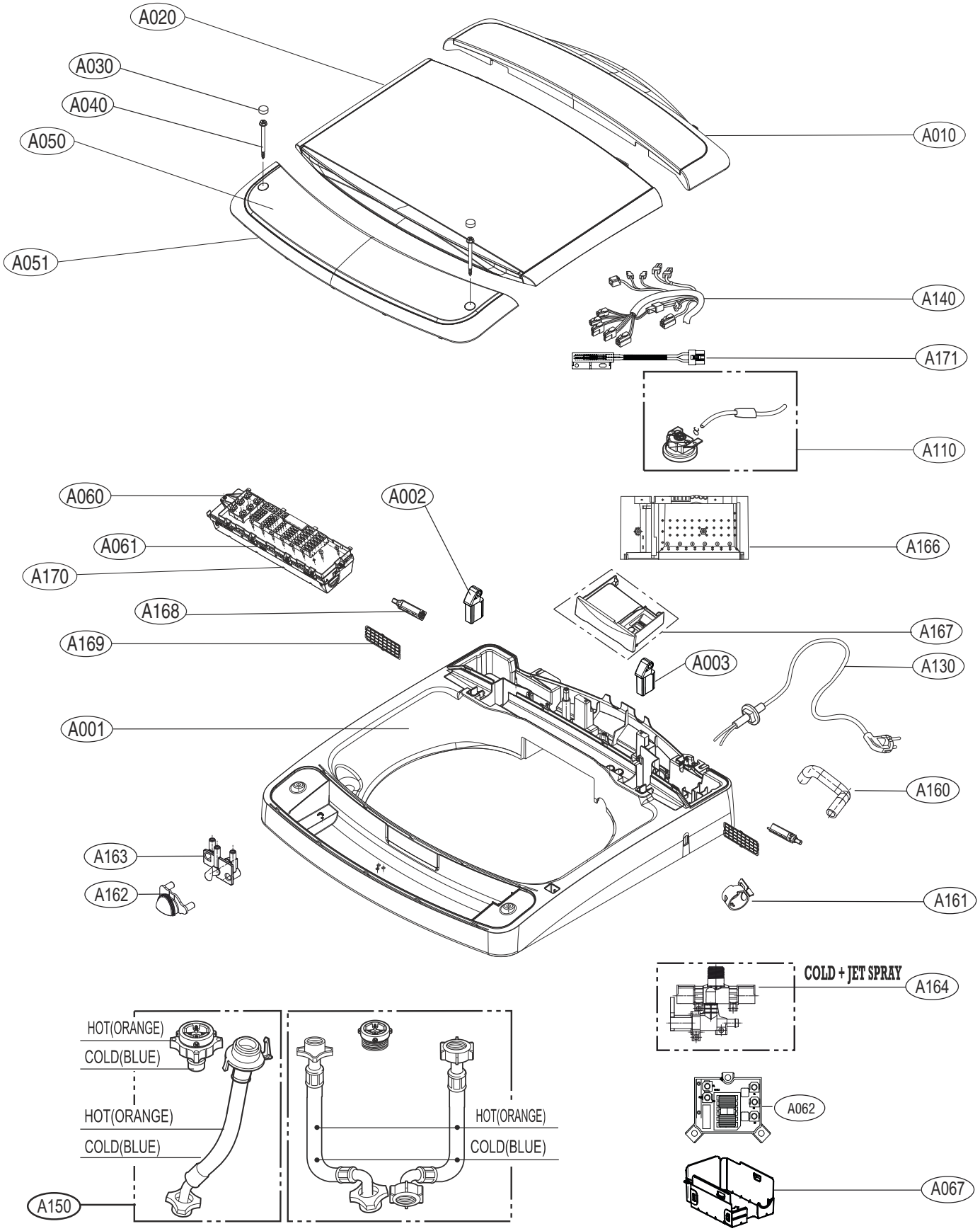

# 5-2. THE EXPLODED VIEW OF OUT CASE ASSEMBLY

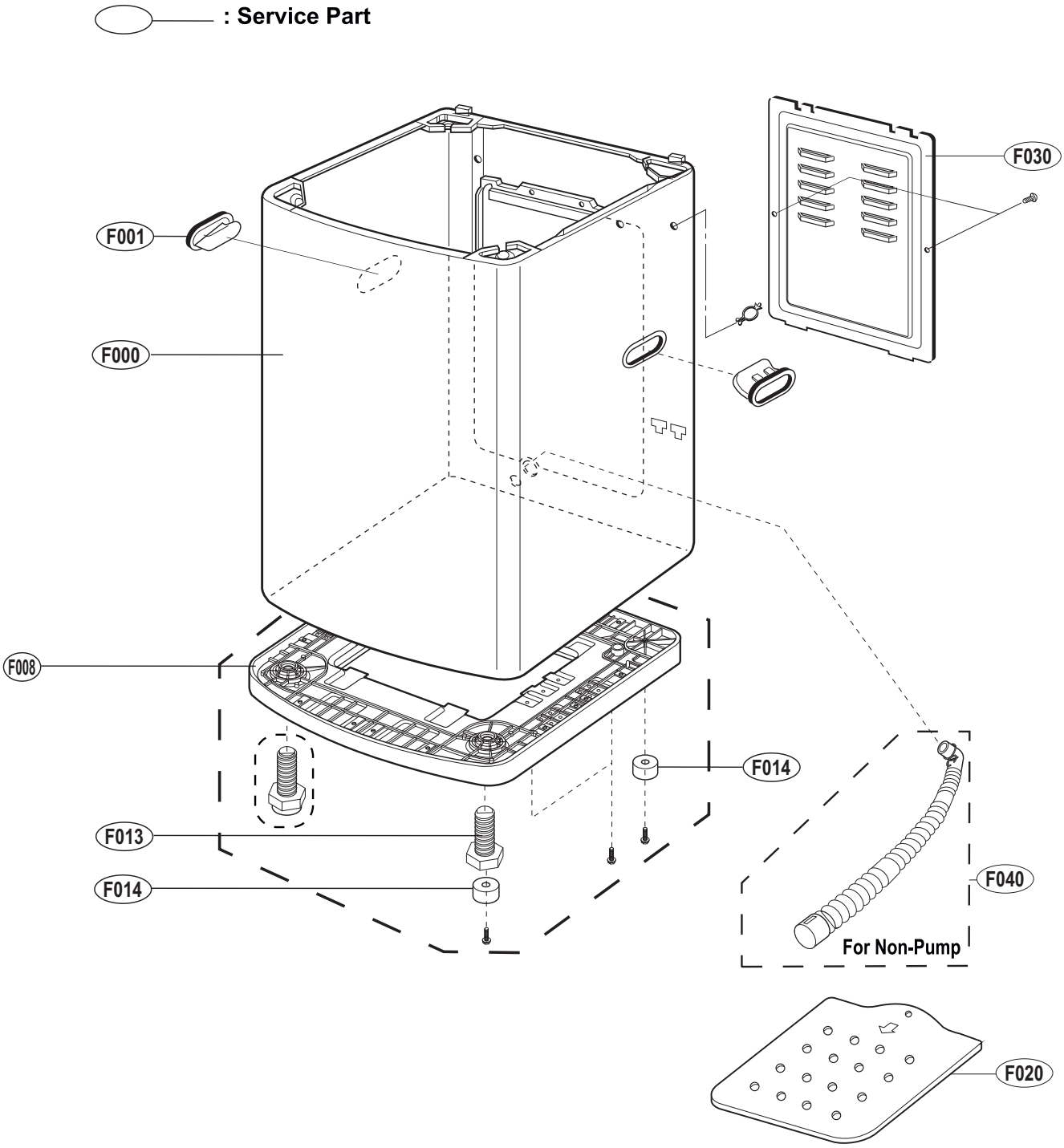
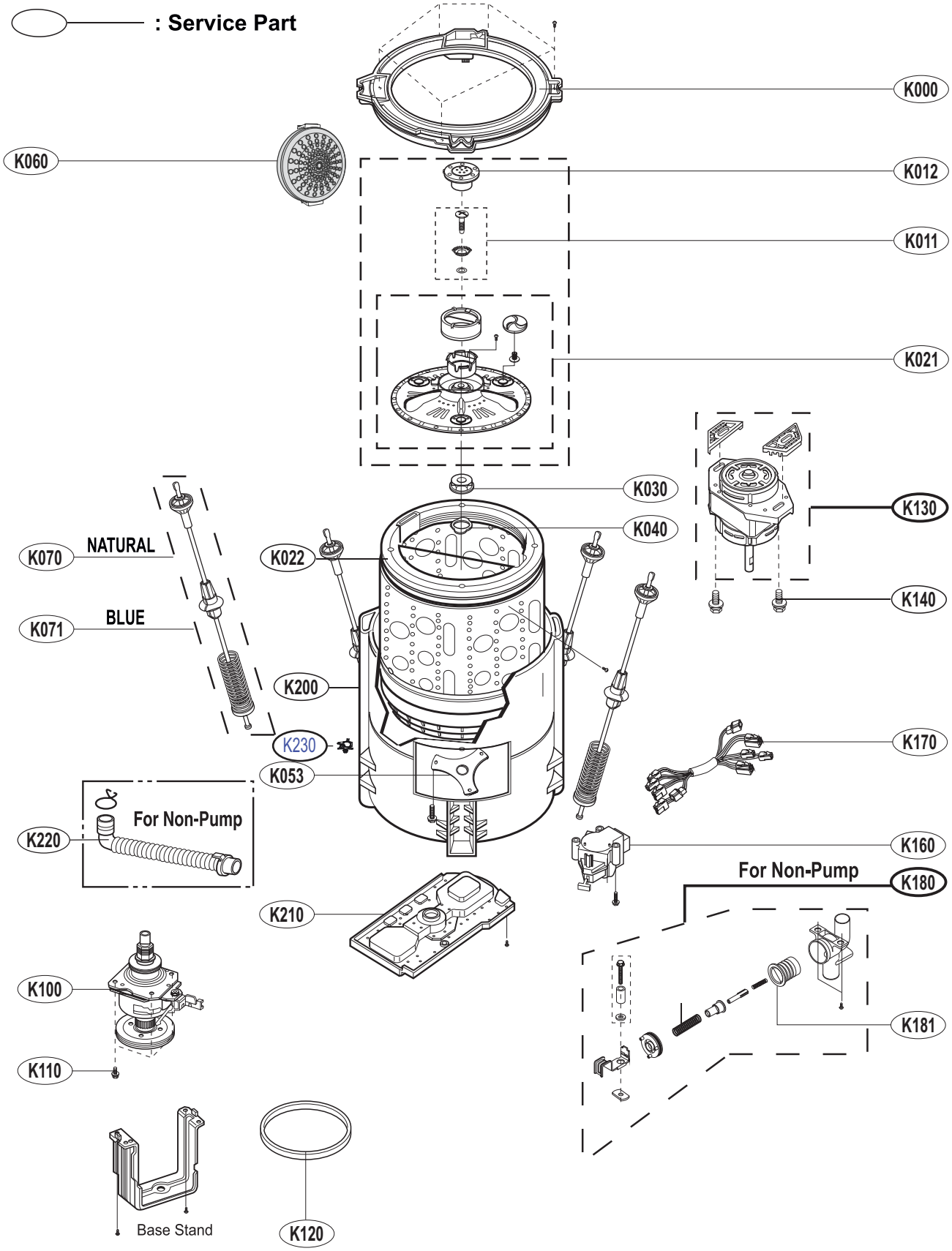
# 5-3. THE EXPLODED VIEW OF TUB ASSEMBLY